Snowspeeder

Available for download at www.momirfarooq.com
For use with Wizards of the Coast's Starship Battles Miniatures

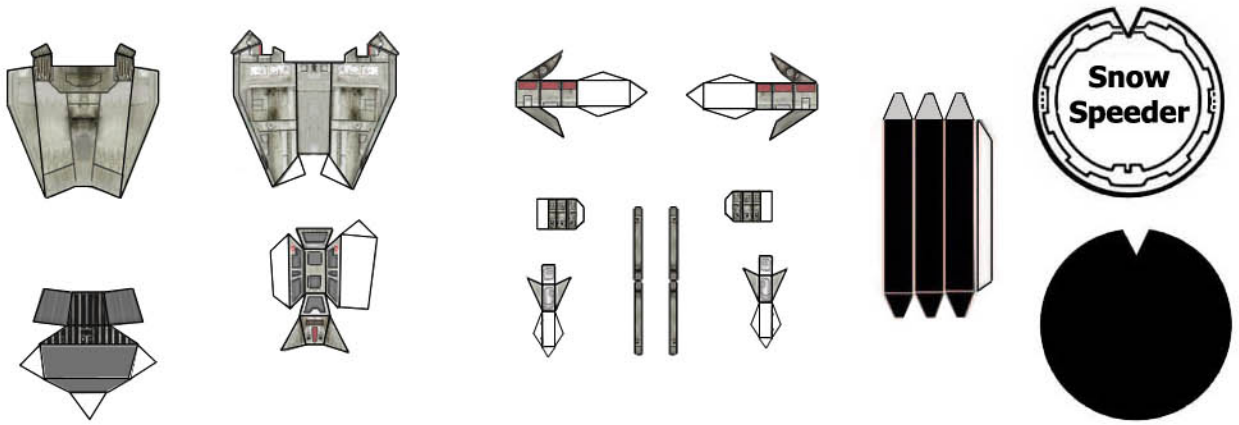

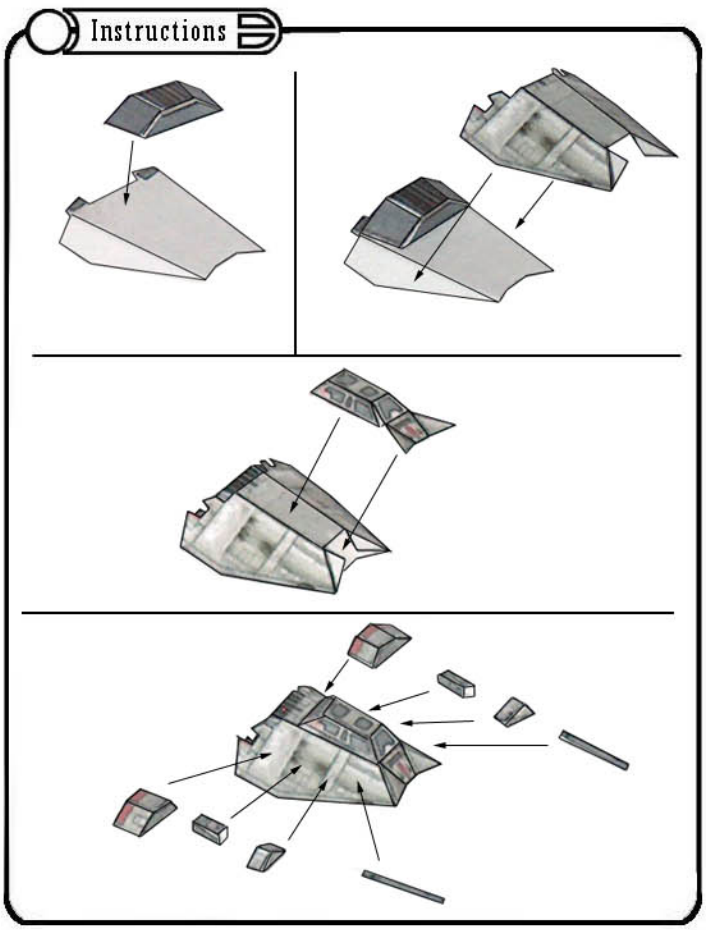

Snowspeeder is copyrighted by Lucasfilm.
Model by Momir Farooq. Textures extracted from the game "Star Wars: Empire at War".